Power Protection for
Business Critical Continuity

Liebert SUPER 400D (10/20 kVA)

TRUE ON-Line DSP Based UPS With Unity Power Factor

Next Generation Pollution Free UPS for Critical Load

UPS FOR LOAD, UPS FOR SOURCE

GREEN POWER
TRUE SINE WAVE
CLEAN POWER

Liebert®

EMERSON™
Network Power

SUPER 400D (10/20 kVA)

AT YOUR SERVICE TODAY and EVERYDAY

The Liebert Super 400D is a true on-line sine wave UPS system that provides the user with clean computer grade power for continuous operation of his critical load, regardless of any disturbance on the upstream AC power. The system offers many innovative features to give the user maximum reliability and flexibility at the lowest operating cost. With Liebert Super 400D UPS system, you have complete peace of mind.

Features & Benefits:

- 10,20 kVA Models
- Full Digital Signal Processing using the latest DSP technology
- Parallel operation for Redundancy
- Wide Input Voltage Range
- Low Input Current Harmonic Distortion of less than 5%
- Unity Input Power Factor
- High Overload and Short-Circuit Capacities
- Compatible with Engine Generators
- High Reliability for Maximum System Availability
- Handles 3:1 Crest Factor Loads
- Intelligent Battery Management
- LCD Display and Mimic Panel for Real-time information
- Output Isolation between UPS and Critical Load
- Temperature compensated Battery charging to enhance the Battery life
- Battery test facility
- Inverter output shortcircuit protected
- Rectifier output shortcircuit protected
- Immune to Reverse Phase sequence
- Auto retransfer facility
- Alarms can be stored in the memory
- DSP and Dual microprocessor based system

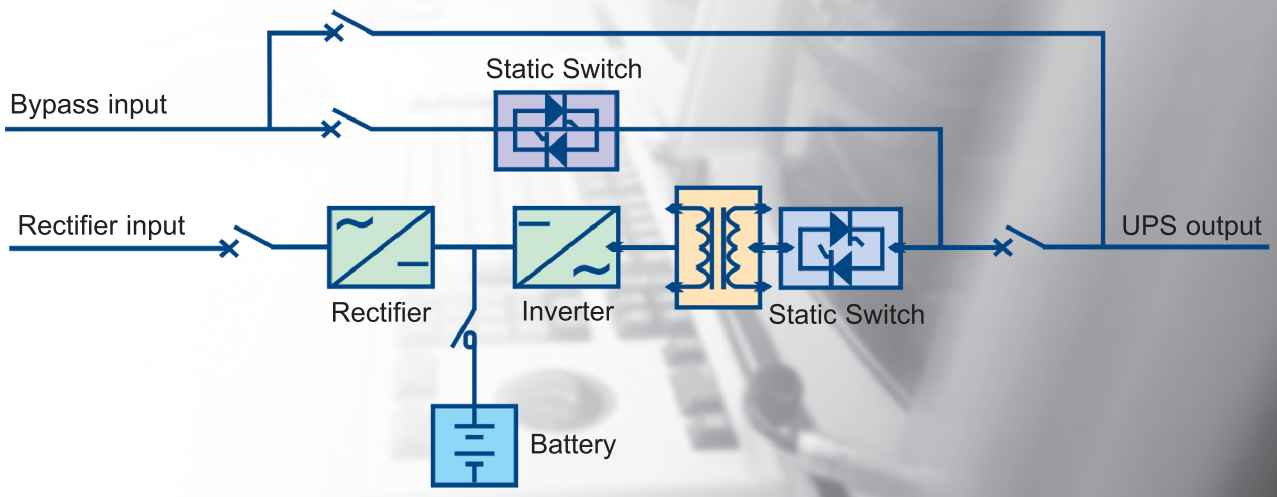

STATE-OF-THE-ART FEATURES IN A COMPACT SYSTEM

IGBT Rectifier

Employing the latest rectifier technology, the Super 400D IGBT rectifier offers an input power factor of greater than 0.99, and input current distortion of less than 5% . Therefore it does not pollute the input utility supply or other devices sharing the same utility source. Also the rectifier operation is not affected by other passive filters in the system.

IGBT Inverter

High speed IGBT inverter gives low output distortion and clean sinusoidal waveform for excellent performance and high reliability.

Digital Signal Processing

The Super 400D uses the most advanced DSP technology. Using high sampling rate possible only with DSP, the system parameters are tightly controlled and maintained throughout the various modes of operation.

Battery Management

Proper testing, charging, discharging and management of the battery system is a very important aspect of the UPS control system. In the Super 400D UPS, the batteries are constantly monitored by an intelligent battery management algorithm.

Paralleling Capability

The Super 400D can be paralleled for redundancy. The units can also be installed in a Hot-Standby configuration for added reliability and flexibility.

Wide Input Voltage Range

The Super 400D features a wide input voltage range which can accept upper input limit of + 25% and can have a lower input limit of - 30%, while still maintaining the specified output stability. This is extremely useful in very poor input power supply situations as the battery energy is not utilized and can be preserved for more prolonged outages.

Reverse Phase Sequence Operation

In a situation where the Input phase sequence is not consistent (any change in phase sequence), the UPS automatically adjusts itself and gets synchronised with the Input phase. This feature prevents the battery energy discharge even if wrong phase sequence power arrives, the rectifier starts as normal operation. this prevents battery being further discharged. On arrival of mains with wrong phase sequence. This improves the backup time and the life of the battery.

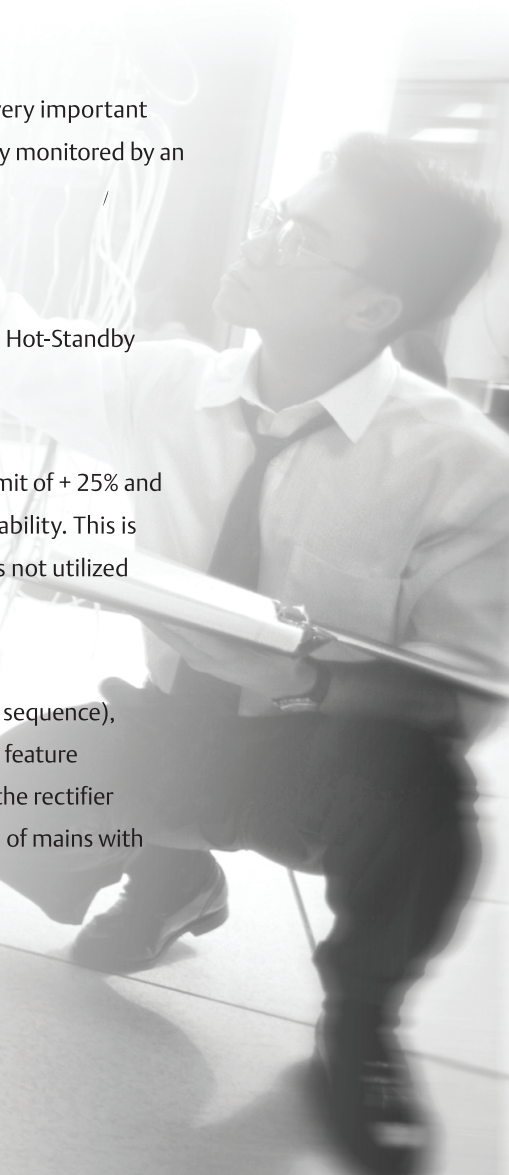

WE HELP YOU GET IT RIGHT - RIGHT FROM THE START.

Input Parameters	Input Voltage	415V, 3-Phase, 4 wire
	Input Voltage Variation	+ 25%, -30 %
	Input Frequency	50 Hz
	Input Frequency Variation	+/- 10%
	Power walk in	Progressive over 10 seconds
	Power Factor at rated load	1.0 (Unity)
	Operation with Reverse Phase Sequence	Possible
Bypass Parameters	Bypass Supply Voltage	220/ 230/ 240V AC
DC Parameters	Nominal DC bus voltage	356V
	Permissible DC voltage variation	260V - 410V
	DC bus OV trip	410V
	End of discharge DC bus	260V
	Types of batteries supported	SMF
	Nominal battery float voltage	356V
	Max. batt.charging current	4.0A (10kVA) / 7.5A (20kVA)
	DC ripple	< 2% rms
	D.C. Voltage Regulation	± 1%
Output Parameters	Output Voltage	220/ 230/ 240 VAC 1 Phase
	Frequency	50 Hz
	Power rating at 0.8 p.f.	10 kVA, 20 kVA
	Power rating at 1.0 p.f.	8 kW, 16 kW
	Overload Rating	110 % for 60 minutes
		125 % for 10 minutes
		150 % for 1 minute
	Max. Non-linear load permissible	100 % with Crest Factor of 3:1
	Output Voltage regulation	+/- 1%
	Transient response for 100% load change	+/- 10%
	Recovery time	10 millisecond
	Freq. stability unsynchronized -	+/- 0.1 %
	synchronized -	± 1Hz, ± 2 Hz, ± 3 Hz
	Max. rate of change of Frequency	0.2 \0.4 hz/sec
	Output Voltage Distortion	< 3 % at Non linear load
		< 2 % at linear load
	Transfer time synchronized -	0 millisecond
	unsynchronized -	20 millisecond
Parameters	Voltage limits for Inv. operation	260V DC to 410V DC
	SMF battery –	26 Blocks of 12 V each
	Float Charge Voltage	356 VDC
	Max. Charging current	4A - 10kVA / 7A - 20kVA
Mechanical Parameters	Height x Depth x Width	1150mm x 650mm x 450mm
	Weight	275kg
	Ventilation	Forced - Air cooled
	Cable entry	Front end - Bottom
	Colour / Panel finish	Structured dark Grey
	Base castor wheels	Yes
Environmental Parameters	Operating Temperature	0°C to 45°C, continuous
	Storage Temperature	0°C to 70°C
	Relative Humidity	95% RH
	Altitude	1000 Meters
	Temperature Derating (kVA)	1.5% per°C between 40 & 50°C
	Altitude Derating (kVA)	1 % per 100m between 1000m - 2000m

Country Office
Emerson Network Power (India) Private Ltd.
Plot No. C-20, Road No. 19, Wagle Estate,
Thane (W), Maharashtra - 400 604. India.
Tel.: 91-22-33154400
Fax: 91-22-25828358
Toll Free No 18002096070
Email: marketing.india@emerson.com

FROST & SULLIVAN

Voice of Customers UPS Awards 2004-05 for Product Line & Customer Service Awards in IT, Telecom, Large Enterprise & Hospitals and Customer Service Leadership Award in BFSI

Best IT Hardware Company
Maharashtra IT Award 2006-07

2007 FORTUNE® WORLD'S MOST ADMIRED COMPANIES

Emerson Among Top 50 On Fortune Survey Of "Worlds Most Admired" Companies.

ISO 9001 DNV Certification, Inc. REGISTERED FIRM

ISO 14001 REGISTERED DNV MGMT. SYS. RvA C425 DNV Certification B.V., The Netherlands

www.emersonnetworkpower.com

- AC Power
- Connectivity
- DC Power
- Embedded Computing
- Embedded Power
- Monitoring
- Outside Plant
- Power Switching & Controls
- Precision Cooling
- Racks & Integrated Cabinets
- Services
- Surge Protection

Emerson Network Power.
The global leader in enabling Business-Critical Continuity™.

While every precaution has been taken to ensure accuracy and completeness in this brochure, Emerson Network Power assumes no responsibility, and disclaims all liability for damages resulting from use of this information or for any errors or omissions.

For disposal of Batteries Please visit the below link:
http://www.cpcb.nic.in/divisionsofheadoffice/hwmd/lead.pdf

Note: Specifications & Features may vary based on the condition.

Emerson Network Power and the Emerson Network Power logo are trademarks and service marks of Emerson Electric Co.
© 2010 Emerson Electric Co.

QS - BR - PRD - 1 - 13 - 01
04 / 11